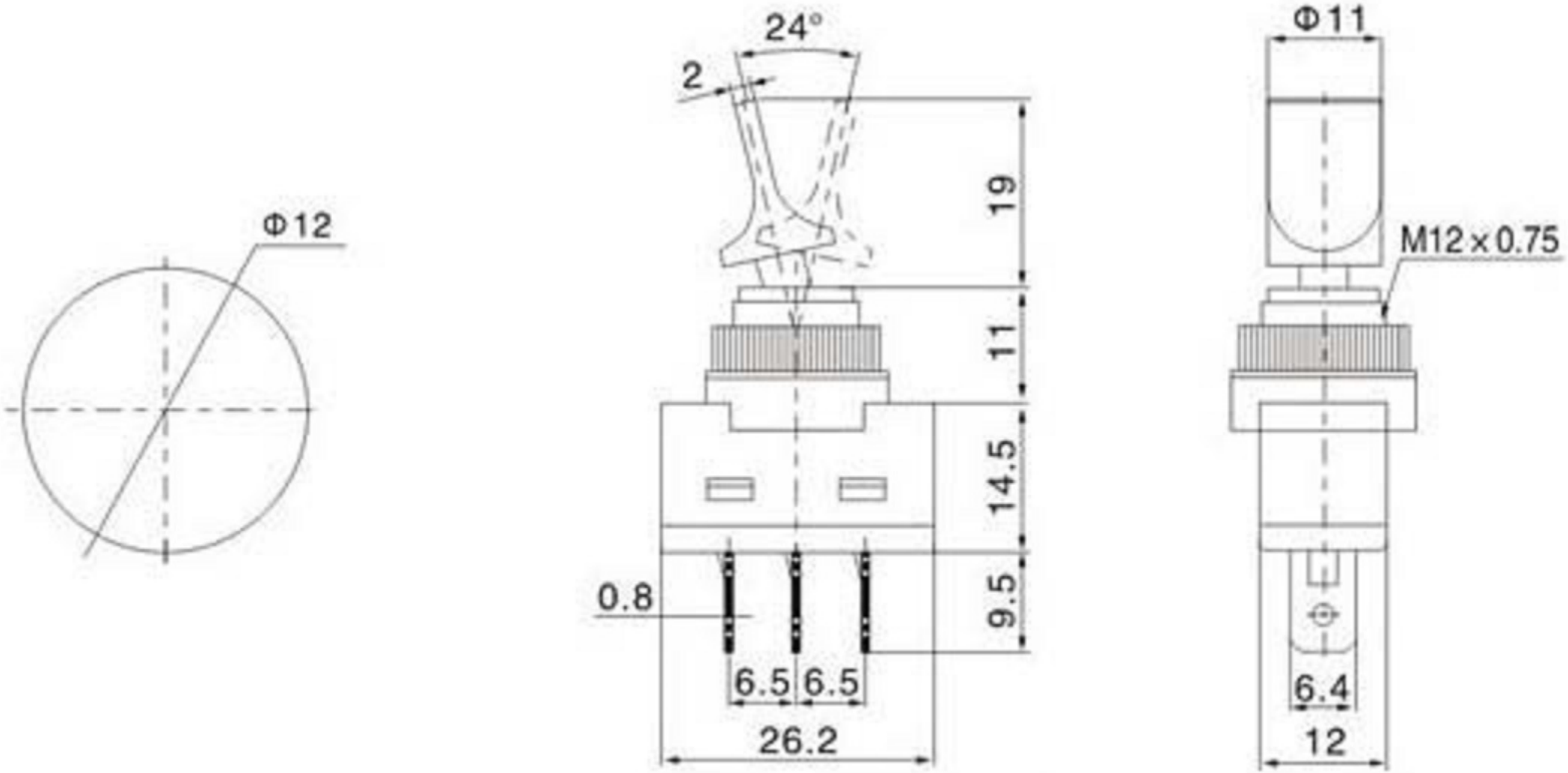
Φ12
24°
2
19
11
14.5
9.5
0.8
6.5
6.5
26.2
Φ11
M12×0.75
6.4
12